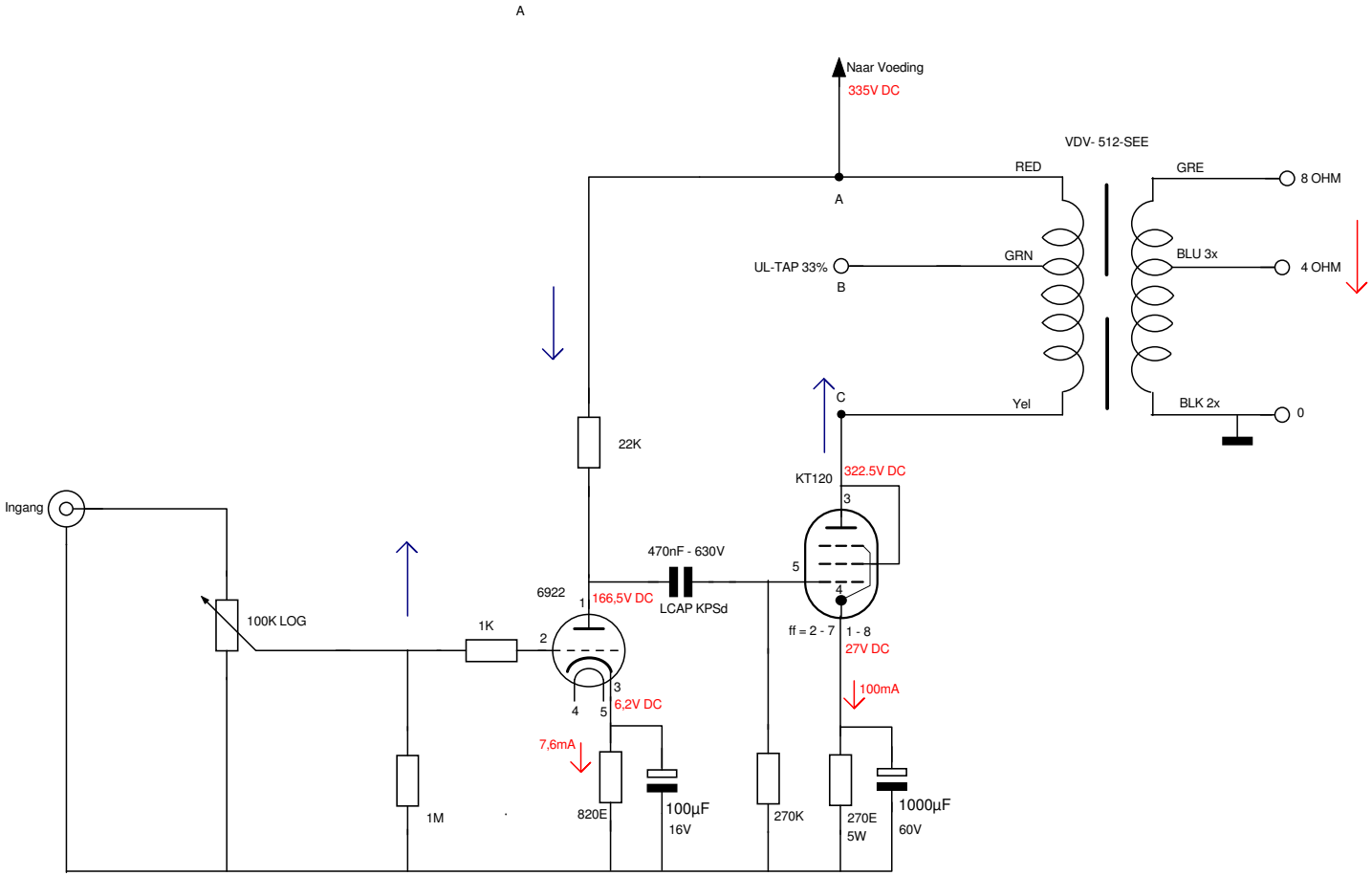

Hessel Haagsma PE0HH

VATSEA Versterker model 1